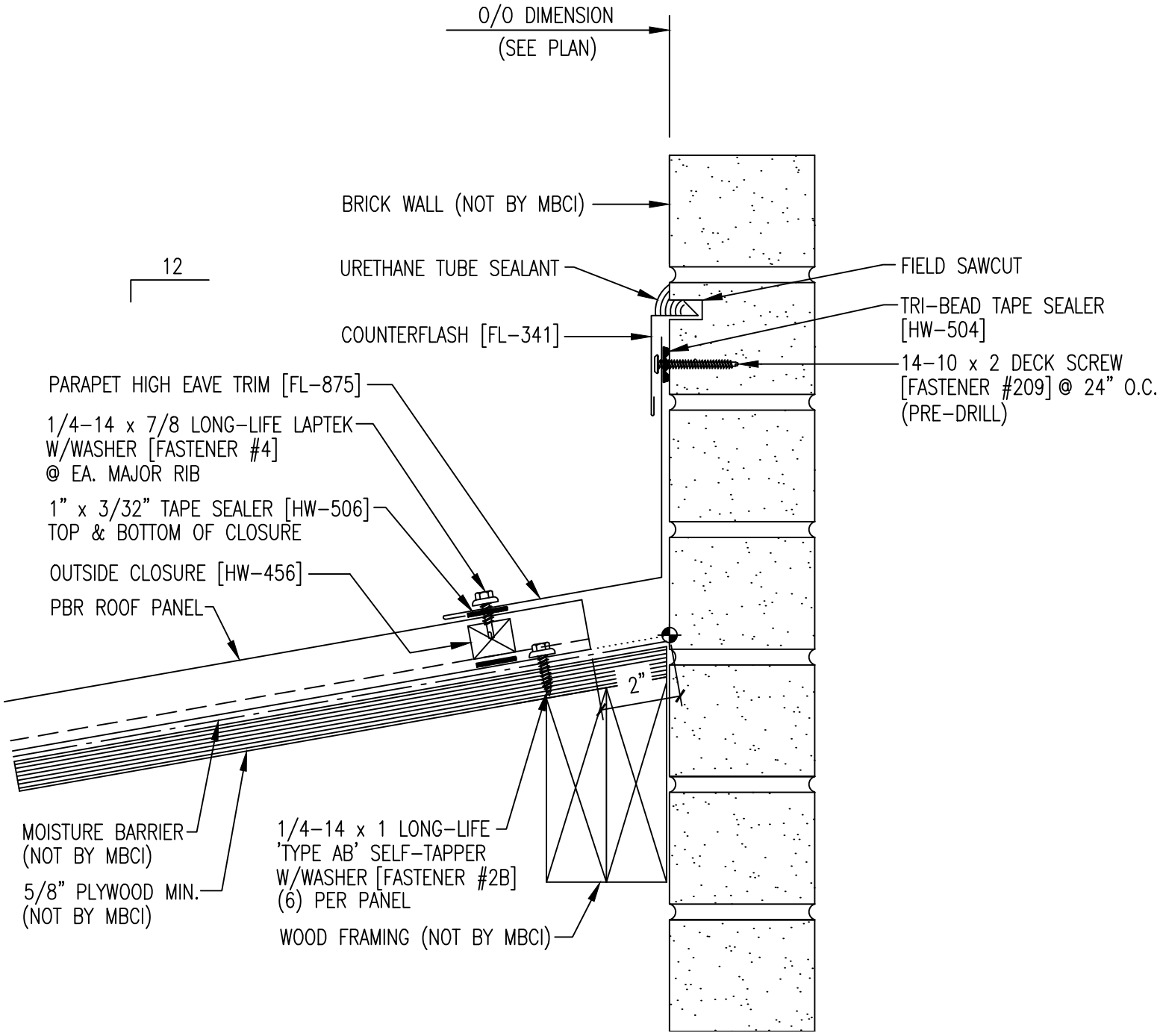
O/O DIMENSION
(SEE PLAN)
BRICK WALL (NOT BY MBCI)
12
URETHANE TUBE SEALANT
FIELD SAWCUT
TRI-BEAD TAPE SEALER
[HW-504]
COUNTERFLASH [FL-341]
14-10 x 2 DECK SCREW
[FASTENER #209] @ 24" O.C.
(PRE-DRILL)
PARAPET HIGH EAVE TRIM [FL-875]
1/4-14 x 7/8 LONG-LIFE LAPTEK
W/WASHER [FASTENER #4]
@ EA. MAJOR RIB
1" x 3/32" TAPE SEALER [HW-506]
TOP & BOTTOM OF CLOSURE
OUTSIDE CLOSURE [HW-456]
PBR ROOF PANEL
2"
MOISTURE BARRIER
(NOT BY MBCI)
5/8" PLYWOOD MIN.
(NOT BY MBCI)
1/4-14 x 1 LONG-LIFE
'TYPE AB' SELF-TAPPER
W/WASHER [FASTENER #2B]
(6) PER PANEL
WOOD FRAMING (NOT BY MBCI)